Trip amplifier

2231

- AC/DC trip amplifier
- 2 adjustable alarm limits
- Galvanically isolated 3.75 kVAC
- Front-programmable
- 3-digit LED display
- 24 VDC or universal supply

Advanced features

- The front-operated push buttons are used for programming the different standard functions.
- A password can prevent access for changing parameters.

Application

- Alarm detector in connection with measurement of AC/DC current or voltage signals.
- The unit is used where accurate setpoint setting and different alarm functions are required.
- The unit can be used as a single or dual trip amplifier.
- Used in applications where programmable parameters such as hysteresis, setpoint, reset, active relay for increasing or decreasing signal, delay and input signal need to be set.

Technical characteristics

- 3-digit display showing the input signal in %.
- Two LED indicating relay status.
- 3 pushbuttons for programming.
- Standard DC current input signals in the range 0...20 mA.
- DC voltage signals in the range 0...250 VDC.
- AC current signals up to 1 A.
- True RMS measurement of AC voltage signals in the range 0...250 VAC.
- Mounting for a standard 11-pole socket which can be adapted for DIN rail or plate use with PR's 7023 adaptor and 7024 mounting keying.

Applications

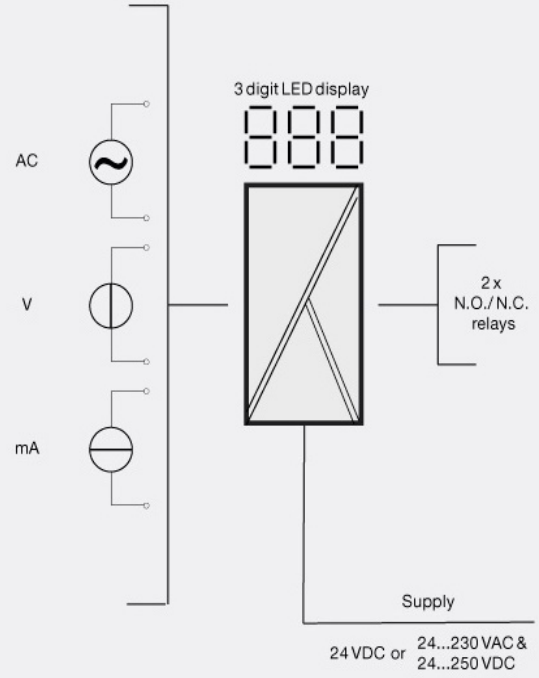

For pricing or any further information, please contact Omni Instruments Ltd.

Measurement and data acquisition solutions

Contact Details:
Tel: +44 1382 443000
Fax: +44 1382 453197
Email: info@omni.uk.com

Mailing Address: Unit 1, 14 Nobel Road, Wester Gourdie Industrial Estate, Dundee, DD2 4UH.

Website: www.omniinstruments.co.uk

Order:

Type	Supply
2231	24 VDC : D 24...230 VAC / : P 24...250 VDC

Environmental Conditions

Operating temperature..... -20°C to +60°C
Calibration temperature..... 20...28°C
Relative humidity..... < 95% RH (non-cond.)
Protection degree..... IP50

Mechanical specifications

Dimensions (HxWxD)..... 80.5 x 35.5 x 84.5 mm (D is without pins)
Weight DC / universally supplied..... 125 g / 175 g

Common specifications

Supply
Supply voltage..... 19.2...28.8 VDC
Supply voltage, universal..... 21.6...253 VAC, 50...60 Hz or 19.2...300 VDC
Internal power dissipation..... 1.5 W (2231D)
Internal power dissipation..... 2 W (2231P)

Isolation voltage
Isolation voltage, test / working..... 3.75 kVAC / 250 VAC
PELV/SELV..... IEC 61140

Response time
Response time (programmable)..... 0.25...60 s (DC)
Response time (programmable)..... 0.75...60 s (AC)

Updating time..... 100 ms
Accuracy..... Better than 0.1% of sel. range
Signal dynamics, input..... 16 bit
Effect of supply voltage change..... < ±0.002% of span / %V
Temperature coefficient..... < ±0.01% of span /°C (DC signals)
Temperature coefficient..... < ±0.02% of span /°C (AC signals)
Linearity error..... < 0.1% of span
Linearity error..... < ±0.35% of span 50...1000 Hz (AC sine wave signals)
EMC immunity influence..... < ±0.5%

Input specifications

Common input specifications
Max. offset..... 50% of selected max. value

Current input
Measurement range..... 0...20 mA
Min. measurement range (span)..... 10 mA
Input resistance..... 50 Ω

AC current input
Measurement range..... 0...1 ARMS
Min. measurement range (span)..... 0.5 ARMS
Input resistance..... 1 Ω / 2 W

Voltage input
Measurement range..... 0...250 VDC
Min. measurement range (span)..... 0.5 VDC
Input resistance..... Nom. 5 MΩ

AC voltage input
AC voltage input..... 0...250 VRMS
Min. measurement range (span)..... 0.5 VRMS
Input resistance..... Nom. 5 MΩ

Output specifications

Relay output
Hysteresis..... 0...99.9% of span
ON and OFF delay..... 0.0...99.9 s
Max. voltage..... 250 VRMS
Max. current..... 2 AAC
Max. AC power..... 500 VA
Max. load at 24 VDC..... 1 A

Common output specifications
Updating time..... 100 ms

Relay outputs: Setpoint setting..... 0...99.9% of span
of span..... = of the presently selected range

Observed authority requirements

EMC..... 2014/30/EU
LVD..... 2014/35/EU
EAC..... TR-CU 020/2011

For pricing or any further information, please contact Omni Instruments Ltd.

omni INSTRUMENTS
Measurement and data acquisition solutions

Contact Details:
Tel: +44 1382 443000
Fax: +44 1382 453197
Email: info@omni.uk.com

Mailing Address: Unit 1, 14 Nobel Road, Wester Gourdie Industrial Estate, Dundee, DD2 4UH.

Website: www.omniinstruments.co.uk