PZDC VELOCITY TRANSDUCER

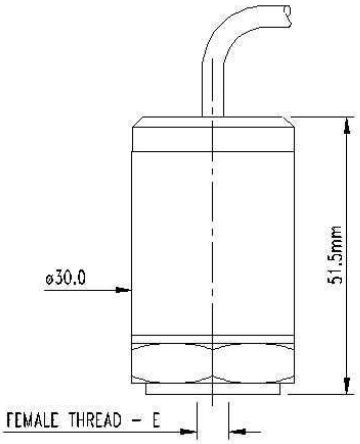

- ROBUST INDUSTRIAL DESIGN
- 4 – 20 mA LOOP POWERED
- VELOCITY VIBRATION UP TO 50mm/s
- LINEARITY WITHIN ±1%
- ATEX APPROVAL Ex ia IIC T4
- FREQUENCY RANGE 2.5Hz to 6KHz
- 120 °C OPERATION

The PZDC series of vibration transducers are compact and robust sealed instruments providing a process output of 4-20mA proportional to RMS velocity vibration. The series are designed for applications requiring direct integration in to SCADA systems (PLC/DCS) and provide an extremely cost effective solution for measuring overall vibration performance.

A simple two-wire loop signal proportional to current provides the electrical interface; the velocity vibration range is factory set between 15mm/s and 50mm/s. Utilising a compression mode technology the sensors offer an extremely linear performance over the full dynamic range and accuracy to within a few percent.

The outer case is constructed from stainless steel and is hermetically sealed and electrically isolated from the signal connectors which are made by top exit cable or a 2 pin MIL style connector. The transducer is mounted by means of a single threaded hole in the base of the cylindrical body; this accepts a mounting stud which can be supplied by Omni Instruments Ltd.

For pricing or any further information, please contact Omni Instruments Ltd.

omni INSTRUMENTS
Measurement and data acquisition solutions

UK / Europe Office
Tel +44 (0)845 9000 601
Fax +44 (0)845 9000 602
info@omni.uk.com
www.omniinstruments.co.uk

Australia / Asia Pacific Office
Tel +61 (0)282 442 363
Fax +61 (0)294 751 278
info@omniinstruments.com.au
www.omniinstruments.com.au

USA / Canada Office
Tel +1-866-849-3441
Fax +1-866-628-8055
info@omniinstruments.net
www.omniinstruments.net

PZDC VELOCITY TRANSDUCER

SPECIFICATION

Operating Voltage..... 16 to 32 volts DC.
Output signal..... 4-20mA proportional to output ranges
Output ranges..... 0 – 15mm/s, 20mm/s, 25mm/s & 50mm/s (g available)
Accuracy ..... ±5%
Frequency Range ..... 10Hz to 1kHz (1dB), 2.5Hz to 6kHz (3dB)
Transverse sensitivity ..... Less than 5%
Temperature sensitivity ..... 0.05% per ºC
Residual electrical noise ..... Less than 0.2mg (2.5Hz to 10kHz)
Signal transmission ..... Two-wire system, electrically isolated from body up to 500Vac.
Weight..... 225 gms (nominal)
Certification ATEX ..... CE Ex II 1G (Ex ia IIC T4) Tamb = 80°C

Environmental

Acceleration limit: Vibration..... 200g pk at 120Hz for 10 mins

Temperature: Operation ..... -30ºC to +120ºC (IP68 version -30ºC to +80ºC)
Survival ..... -55ºC to +140ºC

NB. Certain types of connector or cable may limit the temperature performance of the transducer.

Protection (BS.EN60529)..... Sealed to IP.66 / IP.67 (also IP68 version available)

ORDERING INFORMATION

	A	B	C	D	E	F
PZDC -	5					

A Electrical Configuration

5 - 2 wire ICP 4-20mA loop power

B Connection Method

6 A Integral Cable (80ºC) Unarmoured

6 B Integral Cable (80ºC) Armoured

6 C Integral Cable (140°C) Unarmoured

6 D Integral Cable (140°C) Armoured

7 G Integral Cable/Waterproof Gland (80°C) Unarmoured (IP68 Option)

8 E Integral MIL Conn

C Cable length (Specify in whole metres)

0 2 e.g. = 2 metres (max 25 metres)

D Output Range

1 0-15 mm/sec

2 0-20 mm/sec

3 0-25 mm/sec

4 0-50 mm/sec

E Mounting Thread (Female)

1 - M8

2 - ¼ UNF

F Hazardous Area Approval

0 - Non Intrinsic

1 - Intrinsically Safe Option

For pricing or any further information, please contact Omni Instruments Ltd.

omni INSTRUMENTS
Measurement and data acquisition solutions

UK / Europe Office
Tel +44 (0)845 9000 601
Fax +44 (0)845 9000 602
info@omni.uk.com
www.omniinstruments.co.uk

Australia / Asia Pacific Office
Tel +61 (0)282 442 363
Fax +61 (0)294 751 278
info@omniinstruments.com.au
www.omniinstruments.com.au

USA / Canada Office
Tel +1-866-849-3441
Fax +1-866-628-8055
info@omniinstruments.net
www.omniinstruments.net