SERIES 10

PIEZORESISTIVE OEM PRESSURE TRANSDUCERS

SEALED GAUGE, ABSOLUTE, VENTED GAUGE, DIFFERENTIAL

The Series 10 pressure transducers cover all pressure ranges from 100 mbar to 1000 bar. They have been produced for over 20 years and are the premium product of the KELLER OEM-line. They are all delivered with engraved serial number and electrical leadouts. Several millions of these pressure transducers are in use world-wide in a variety of different applications. Main fields of application are: Level technology, pneumatics, hydraulics, avionics.

A high-sensitivity piezoresistive silicon chip is used for pressure sensing. The chip is protected against ambient influences by a stainless steel housing sealed with a concentrically corrugated diaphragm. The housing is filled with silicone oil so as to ensure the transfer of the pressure from the diaphragm to the sensing component.

All metal parts in contact with the pressure media are made of stainless steel 316L. The fully welded housing is vacuum-tight.

Series 10

A RUGGED PRESSURE TRANSDUCER

The piezoresistive chip immersed in silicone oil is welded into a housing made of stainless steel 316L.

HIGH SENSITIVITY

A nominal signal of 900 mV is obtained at a supply current of 4 mA for the standard pressure ranges above 2 bar.

FLEXIBILITY

Versions: absolute pressure, sealed gauge, barometric, vented gauge and wet/wet differential. 18 nominal measurement ranges from 0,1 to 1000 bar. Different materials (Hastelloy, Platinum, Inconel, Monel among others). Various kinds of oil filling (olive oil, fluorinated oil, low temperature oil etc.)

QUALITY

Each pressure transducer is subjected to comprehensive tests as to its pressure response and temperature characteristic, and is delivered with an individual calibration certificate stating the characteristics as well as the results of all tests which were performed. Special testing is available if demanded by the customer.

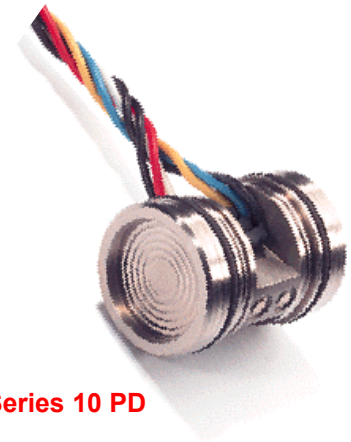

Series 10 PD

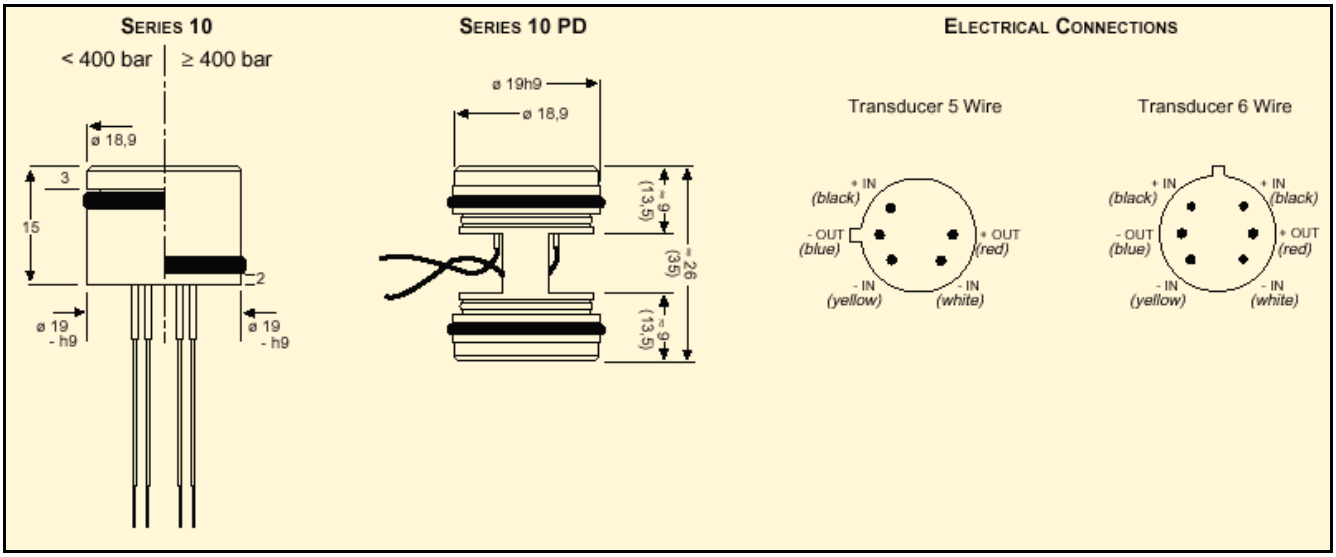

Subject to alterations

Omni Instruments
Measurement > Control > Data Acquisition

UK / Europe Office
Tel: +44 (0)8700 434040
Fax: +44 (0)8700 434045
info@omniinstruments.co.uk
www.omniinstruments.co.uk

Australia / Asia Pacific Office
Tel +61 (0)282 442 363
Fax +61 (0)294 751 278
info@omniinstruments.com.au
www.omniinstruments.com.au

USA / Canada Office
Tel +1-866-849-3441
Fax +1-866-628-8055
info@omniinstruments.net
www.omniinstruments.net

SERIES 10

SPECIFICATIONS. Excitation I = 4 mA

PRESSURE RANGES (FS) AND OVERPRESSURE IN BAR. SIGNAL OUTPUT IN mV.

PR-10	-1	-0,5	-0,2	-0,1	0,1	0,2	0,5	1	2	5	10	20							
PD-10					0,1	0,2	0,5	1	2	5	10	20							
PAA-10					0,1	0,2	0,5	1	2	5	10	20							
PA-10								1	2	5	10	20	50	100	200	400	600	1000	
Signal Output typ.	400	250	135	85	85	135	250	400	600	900	900	900	900	900	900	900	900	900	
Overpressure	-1	-1	-1	-1	2,5	2,5	2,5	3	4	10	20	40	100	200	300	600	900	1100	
PD, neg. Overpressure -					1	1	1	2	3	5	7	10							
PD, Line Pressure	≤200 bar																		

PAA: Absolute. Zero at vacuum PA: Sealed Gauge. Zero at atmospheric pressure (at calibration day)
PR: Vented Gauge. Zero at atmospheric pressure PD: Differential

Bridge Resistance @ 25°C .	Ω	3500	± 20%
Constant Supply	mA	4 nominal	5 max.
Insulation @ 50 VCC	MΩ	100	

Operating Temperature	°C	-30…100	-55…150 (optional)
Compensated Range	°C	0…50 (1)	-10…80 (1)
Storage Temperature	°C	-40…100	- 60…150
Vibration (20…5000 Hz)	g	20	
Endurance (FS @ 25°C)	Cycles	>100 x 10 6 FS	

Housing and Diaphragm	Stainless Steel, Type 316 L
Seal Ring	Viton (1) , iØ 15,6 x 1,78mm (PA/PR) iØ 17 x 1mm (PD)
Oil Filling	Silicone Oil (1)
Weight	26 g (PA/PAA/PR), 36 g (PD)
Dead Volume Change @ 25°C	<0,1 mm 3 / FS
Electrical Wires	0,09mm 2 , 12 x Ø 0,1mm, Silicone sheathed, Insulation 250V, oØ 1,2 mm, Length 7cm (1)

Accuracy (2)	% FS	0,25 typ. (1)	0,5 max.	
Offset at 25°C	mV	< 20 mV (compensated with R5 of 22(3))		
Temperature Error		**0...50 °C**	**-10…80°C**	**-55...150 °C**
- Zero	mV / °C	< 0,05	< 0,10	< 0,15
- Sensitivity	% / °C	< 0,01	< 0,02	< 0,05
Long Term Stability typ.	mV	1	2	3
Line Pressure Influence	mV/bar	< 0,05 (PD 10)		
Natural Frequency (Resonance)	kHz	>30		

(1) Others on request.
(2) Including linearity, hysteresis and repeatability. Linearity calculated as best straight line through zero.
Note: Generally, accuracy and overload is improved by factor of 2 to 4 if the sensor is used in the range of 0…50% FS
(3) External compensation, potentiometer not supplied.

OPTIONS

- Platinum- or Hastelloy C-276 diaphragm. Transducer all Hastelloy C-276
- Flush diaphragm
- Oil for low temperatures. Fluorinated oil. Olive oil
- Integrated temperature sensor (version PA, PAA, PR)
- Special characteristics: Linearity, overpressure, lower TC-zero
- Special tests
- All pressure ranges between 0,1 and 1000 bar
- All temperature ranges between -55 and +150°C
- Compensation PCB fitted
- Explosion proof version

---------- 84
PR-10-0.5 (1) **SN 925EQ** (2)
----

(3) Temp	(4) Zero	(5) +270	(6) Comp	(7) dZero
-8.6	-5.5	-50.6	-60.8	-2.6
1.0	-2.6	-49.1	-59.7	-1.4
25.8	4.6	-46.6	-58.2	0.0
50.6	11.3	-45.6	-58.6	-0.3
80.7	19.0	-46.4	-61.3	-3.0

---------- 1

COMP R1 = 220 kOhm (8) R4 = 56.0 Ohm (8)
ZERO - 2.2 mV (9) P_atm 962 mbar (10)
SENS. 450 mV/bar (11)

(12) (bar)	(13) (mV)	(14) Lnorm	(15) Lbfsl
0.125	56.0	-0.08	-0.04
0.250	112.2	-0.07	-0.06
0.375	168.5	-0.02	-0.02
0.500	224.9	0.08	0.06

Long Term Stability OK (16)
Chip (1010) (17)
Excitation 4.0 mA (18) 500 Volt Test (19)
01.10.97 (20) ---------- PH02.F02F00 (20)

Each sensor is delivered with a calibration sheet with the following data:
1. Type (PR-10) and range (0,5 bar) of pressure sensor
2. Serial number of pressure sensor
3. Test temperatures
4. Uncompensated zero offset in mV
5. Zero offset values, in mV, with test resistance (270 k)
(for factory computation only)
6. Zero offset, in mV, with calculated compensation resistor R1 or R2
7. Temp. zero error, in mV, with compensation resistor R1 or R2
8. Compensation resistor values R1 / R2 and R3 / R4
9. Offset with compensation resistors R1/ R2 and R3 / R4 fitted.
(fine adjustment of zero with R5 potentiometer)
10. Ambient pressure, zero reference for absolute sensors < 20 bar
11. Sensitivity of pressure sensor
12. Pressure test points
13. Signal at pressure test points
14. Linearity (best straight line through zero)
15. Linearity (best straight line)
16. Results of long term stability
17. Chip-type (on request, identification of silicon chip)
18. Excitation (constant current)
19. Voltage insulation test
20. Date of test --------Test equipment

Remarks:
- The indicated specifications only apply for constant current supply; the sensor should be excited between 0,5 and 4 mA. The sensor signal is proportional to the current. When exciting with constant voltage, the zero offset values remain the same, the sensitivity de-creases approx. 1% per +5°C.
- If exposed to extreme temperatures, the compensation resistors should have a temperature coefficient of < 50 ppm/°C. Sensor and resistors can be exposed to different temperatures.
- The sensors may be ordered with integrated compensation resistors.

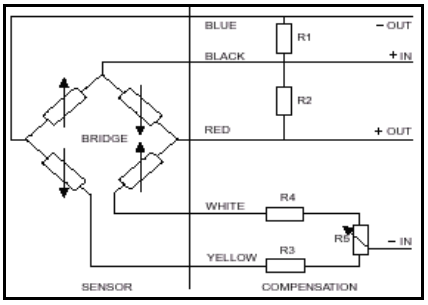

Subject to alterations

Omni Instruments
Measurement > Control > Data Acquisition

UK / Europe Office
Tel: +44 (0)8700 434040
Fax: +44 (0)8700 434045
info@omniinstruments.co.uk
www.omniinstruments.co.uk

Australia / Asia Pacific Office
Tel +61 (0)282 442 363
Fax +61 (0)294 751 278
info@omniinstruments.com.au
www.omniinstruments.com.au

USA / Canada Office
Tel +1-866-849-3441
Fax +1-866-628-8055
info@omniinstruments.net
www.omniinstruments.net