Omni Instruments
Measurement > Control > Data Acquisition

UK / Europe Office
Tel: +44 (0)845 9000 601
Fax: +44 (0)845 9000 602
info@omniinstruments.co.uk
www.omniinstruments.co.uk

Australia / Asia Pacific Office
Tel +61 (0)282 442 363
Fax +61 (0)294 751 278
info@omniinstruments.com.au
www.omniinstruments.com.au

USA / Canada Office
Tel +1-866-849-3441
Fax +1-866-628-8055
info@omniinstruments.net
www.omniinstruments.net

Model GC55 Wet/Wet Differential Pressure Transducer

Two sensor DP design means three measurement variables in one device. Output, display and switch settings can be set in nearly ANY independent configuration to monitor, high pressure port (P1), low pressure (P2), differential (P1-P2).

FEATURES:

- *Robust aluminum die cast housing*
- *Bright LED display of pressure and switch status*
- *All stainless steel wetted parts*
- *4-20 mA or 1-5 VDC outputs*
- *Internal "Push-Button" configurability allows quick user pressure range changes or relay adjustments*
- *External "Push-Button" allows user to display P1, P2 or DP without opening cover*
- *Two sensor design well suited for high DP ranges*

APPLICATIONS

The GC55 utilizes two polysilicon thin film sensors to achieve a wet-wet, high differential, pressure measurement. Fully welded assembly of all stainless steel with high overpressure capability makes the GC55 ideal for fluid pump systems in applications such as:

- Level measurement in large size and/or pressurized tanks
- Pump monitoring of building hydronic heating and cooling systems

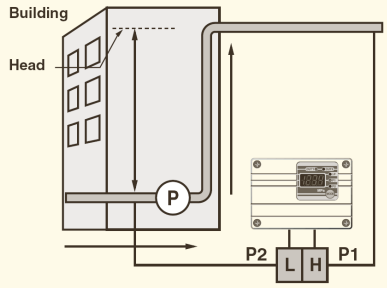

- Filter monitoring in water purification or hydraulic systems

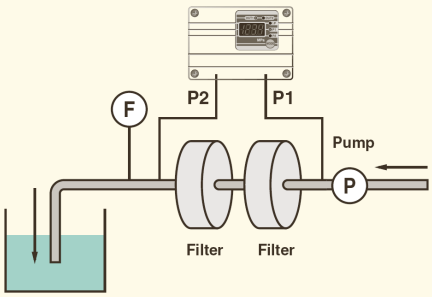

PERFORMANCE SPECIFICATIONS

Analog Output (4-20 mA or 1-5 VDC):
Accuracy: ±0,5 % F.S.
(Accuracy includes the effects of linearity, hysteresis and repeatability)
Response time: ≤ 20 ms
Output resolution: 0,2 % F.S.

Pressure Switch Output:
Type: TTL/CMOS up to 40 VDC/200 mA
Setting accuracy: ±1,0 % F.S.
Number of contacts: 2
Response time: 0,02 … 2 s (by user)
Hysteresis: variable (by user)

Display:
Type: 3 ½ digits LCD
Accuracy: ±1,0 % FS

Standard Ranges (Differential):
0 … 75, 100, 150, 250, 300 psi
(0 … 5, 7, 10, 17, 20 bar)

ENVIRONMENTAL SPECIFICATIONS

Temperature Limits:
Operating temperature: -10 … 50 °C
Storage temperature: -20 … 60 °C
Compensated temperature: -10 … 50 °C

Temperature Effects:
±0,05 % / 1 K from -10 … 50 °C (Ref. 23 °C)

FUNCTIONAL SPECIFICATIONS

Static (Line) Pressure:

Pressure Range	Proof	Burst
All	2x F.S. (URL)	10x F.S.

Static (Line) Pressure Effects: None

Single Side (Differential) Limits:

Pressure Range	Proof	Burst
All	2x F.S. (URL)	10x F.S.

ELECTRICAL SPECIFICATIONS

Transducer Output Signal	Supply Voltage	Supply Current
4 … 20 mA, 3 wire	15-27 VDC	80 mA
1 … 5 VDC, 3 wire	11-27 VDC	60 mA

Switch Contacts: 2 Photo-MOS relay outputs, load max. 200 mA / 40 VDC, Hysteresis variable

Rangeability/Adjustment*:
zero -105 % … 105 % F.S.
span -105 % … 105 % F.S.
* Note: Accuracy based upon full scale (URL) value

MECHANICAL SPECIFICATIONS

Process Connection: 1/8 NPT female (2)

Enclosure:
Aluminum, Epoxy coated

Rating acc. to IEC 529: IP64

Electrical Connection:
- ½ NPT female conduit
- cable gland Ø 9 … 12 mm

Weight: 0,45 kg

Mounting: (2) 5,2 mm mounting holes (see installation drawings on back page

Media: Fluids and gases compatible with stainless steel 1.4404/304 (sensor housing) and 1.4542/17-4PH (sensor diaphragm).

General dimensions in mm

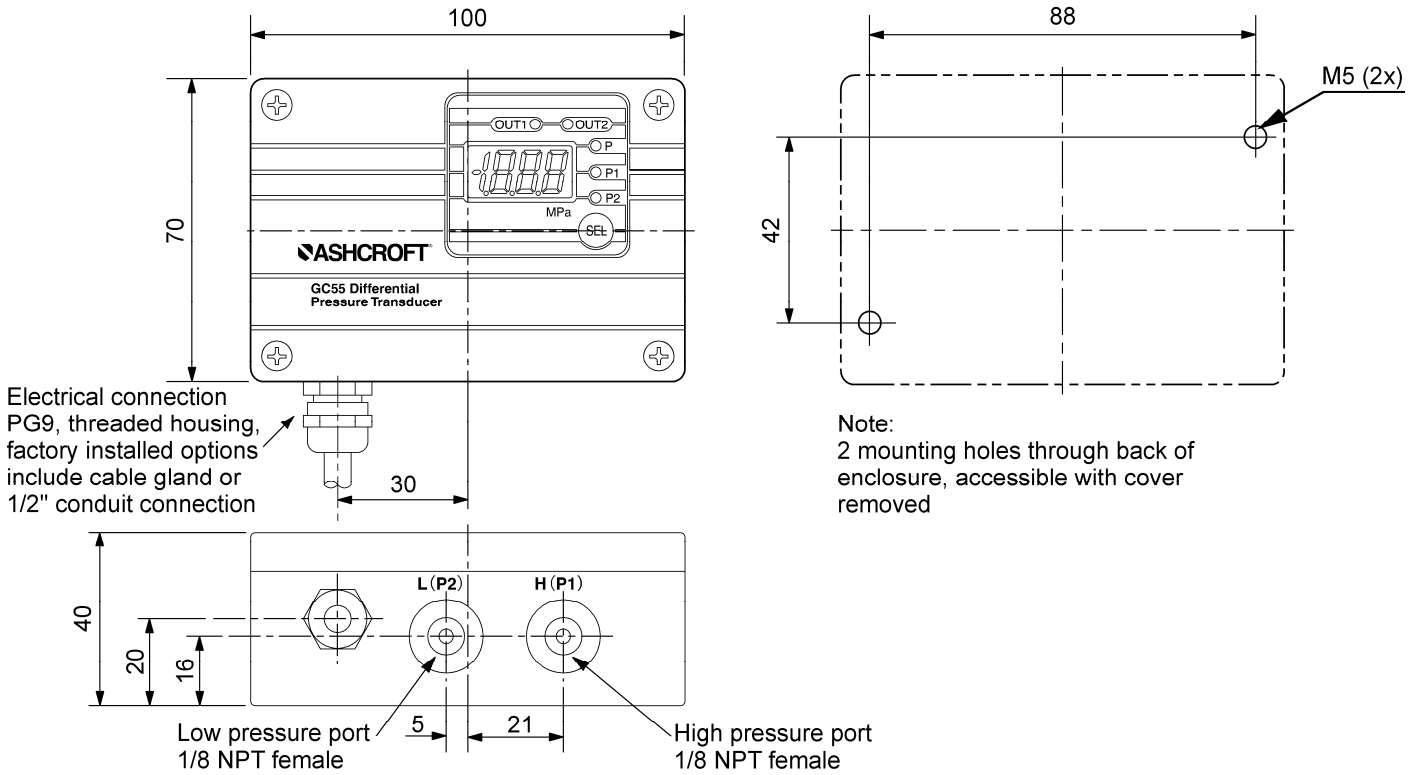

Electrical connection

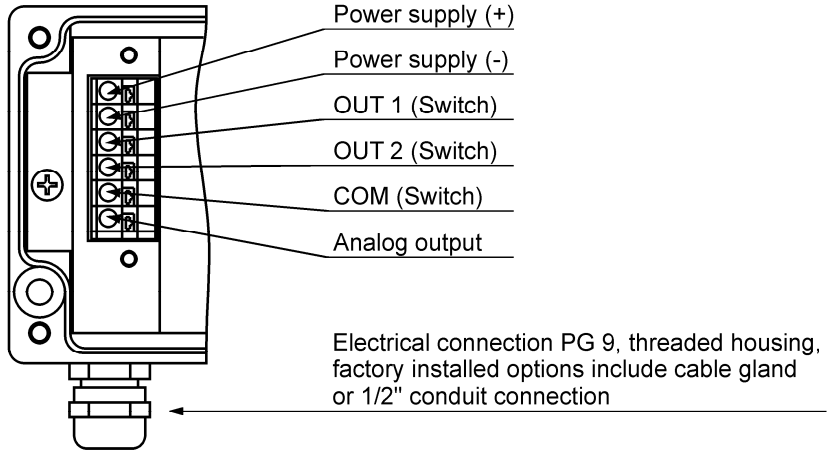

Rev. A

Order information

Type	Accuracy	Process connection	Output signal	Electrical connection	Range	Eng. unit	Options
GC55	**(7)** 0,5 %	**(F01)** 1/8 NPT female	**(15)** 1-5 VDC **(42)** 4-20 mA	**(CG)** Cable gland **(CD)** ½“ MNPT conduit	**75** **100** **150** **250** **300**	**PSI** bar and others to be set by firm-ware	**(NH)** Tagging wired **(RH)** 9 point NIST traceable calibra-tion certificate

Order example

Type	Accuracy	Process connection	Output signal	Electrical connection	Range	Engineering unit	Options
GC55	7	F01	42	CG	100	PSI	NH

Omni Instruments
Measurement > Control > Data Acquisition

UK / Europe Office
Tel: +44 (0)845 9000 601
Fax: +44 (0)845 9000 602
info@omniinstruments.co.uk
www.omniinstruments.co.uk

Australia / Asia Pacific Office
Tel +61 (0)282 442 363
Fax +61 (0)294 751 278
info@omniinstruments.com.au
www.omniinstruments.com.au

USA / Canada Office
Tel +1-866-849-3441
Fax +1-866-628-8055
info@omniinstruments.net
www.omniinstruments.net