Digital input board, 32 isolated channels, 24 V

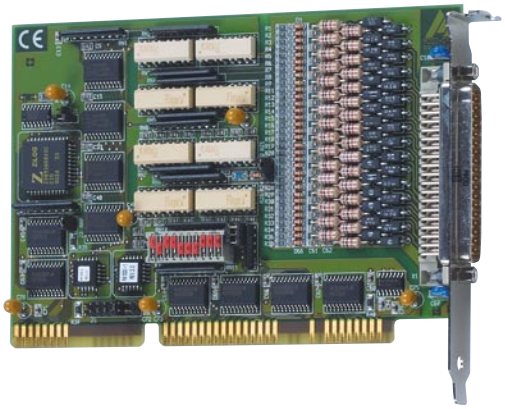

PA 1000

32 digital inputs, 24 V
incl. 14 interruptible inputs

Optical isolation 1000 V

Voltage reversal protection

Timer

RoHS 2002/95/EC

LabVIEW™

LabWindows/CVI™

Features

Digital inputs

- 32 isolated input channels, 24 V, incl. 14 interruptible
- 1 channel can be dedicated to the monitoring of the 24 V supply voltage (channel 16)
- Address range adjustable through DIP switches
- 16-bit or 8-bit data bus access

Safety features

- Optical isolation 1000 V
- Creeping distance IEC 61010-1 (VDE411-1)
- Voltage reversal protection
- All inputs are filtered
- Protection against fast transients (Burst), overvoltage, electrostatic discharge and high-frequency EMI
- Additional noise suppression on the interrupt lines

EMC tested acc. to 89/336/EEC

- IEC 61326: electrical equipment for measurement, control and laboratory use

Applications

- Digital monitoring
- Signal switching
- Optical isolation between PC and peripheral
- Automatic test equipment
- Equipment monitoring
- Machine interfacing
- ...

Software drivers

A CD-ROM with the following software and programming examples is supplied with the board.

Standard drivers for:

Windows XP/2000/NT/98/95, Windows 3.11, MS-DOS
Real-time drivers for Windows XP/2000/NT

Drivers for the following application software:

LabVIEW 5.01

Samples for the following compilers:

- Microsoft VC++ 5.0
- Microsoft C 6.0
- Borland C++ 5.01
- Borland C 3.1
- Visual Basic 5.0
- Visual Basic 1.0
- Delphi 1
- Delphi 4
- Turbo Pascal 7.0

On request:

- Visual Basic 4.0
- LabWindows/CVI 5.01

Current driver list on the web: www.addi-data.com

Protective circuitry for the input channels

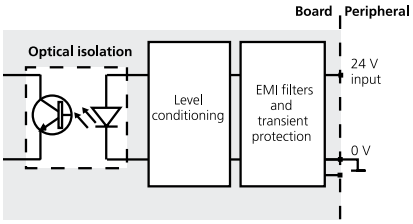

UK / Europe Office
Tel: +44 (0)845 9000 601
Fax: +44 (0)845 9000 602
info@omniinstruments.co.uk
www.omniinstruments.co.uk

Australia / Asia Pacific Office
Tel +61 (0)282 442 363
Fax +61 (0)294 751 278
info@omniinstruments.com.au
www.omniinstruments.com.au

USA / Canada Office
Tel +1-866-849-3441
Fax +1-866-628-8055
info@omniinstruments.net
www.omniinstruments.net

Digital input board, 32 isolated channels, 24 V

Omni Instruments
Measurement > Control > Data Acquisition

Specifications

PA 1000

Digital inputs

Number of inputs:	32	
Optical isolation:	through optical couplers, 1000 V from the PC to the peripheral	
Interruptible inputs:	14 of the 32 digital inputs	
Interrupt comparison logic:	AND and OR mode; OR priority	
Interrupt lines:	IRQ 3, 5 for XT IRQ 10, 11 12, 14, 15 for AT	
Nominal voltage:	24 V external	
Input current at 24 V:	6 mA typ.	
Logic input level:	U nominal:	24 V
	UH max.:	30 V/current 9 mA typ.
	UH min.:	19 V/current 2 mA typ.
	UL max.:	14 V/current 0,7 mA typ.
	UL min.:	0 V/current 0 mA typ.
Logic input level for the 24 V monitoring: (channel 16, selectable through jumper)	U nominal:	24 V
	UH max.:	30 V/current 10 mA typ.
	UH min.:	20 V/current 3 mA typ.
	UL max.:	18 V/current 1 mA typ.
	UL min.:	0 V/current 0 mA typ.
Signal delay (at 24 V):	channel 1-16: 70 µs channel 17-32: 40 µs	
Maximum input frequency:	5 kHz (at 24 V)	

EMC – Electromagnetic compatibility

The product complies with the European EMC directive. The tests were carried out by a certified EMC laboratory in accordance with the norm from the EN 61326 series (IEC 61326). The limit values as set out by the European EMC directive for an industrial environment are complied with. The respective EMC test report is available on request.

Physical and environmental conditions

Dimensions:	156 x 99 mm
System bus:	ISA
Place required:	1 XT or AT slot
Operating voltage:	+5 V, ±5 % from PC
Current consumption:	194 mA ±10 mA typ.
Front connector:	37-pin SUB-D male connector
Temperature range:	0 to 60 °C (with forced cooling)

Simplified block diagram

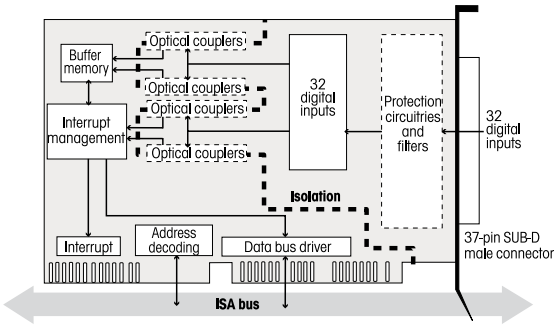

Pin assignment – 37-pin SUB-D male connector

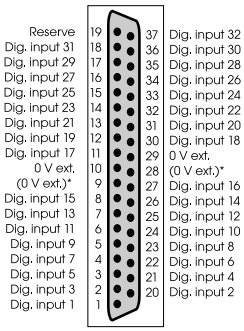

* No signal connected at delivery, intended for current return lines

ADDI-DATA connection

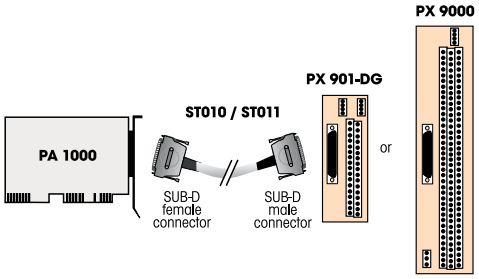

Terminal panel PX 901-DG
with cable ST010

Ordering information

PA 1000

Digital input board, 32 isolated channels, 24 V. Incl. technical description and software drivers.

Connection

PX 901-D: Screw terminal panel, LED status display
PX 901-DG: Screw terminal panel for DIN rail, LED status display
PX 9000: 3-row screw terminal panel for DIN rail, LED status display

ST010: Standard round cable, shielded, twisted pairs, 2 m
ST011: Standard round cable, shielded, twisted pairs, 5 m

Omni Instruments
Measurement > Control > Data Acquisition

UK / Europe Office
Tel: +44 (0)845 9000 601
Fax: +44 (0)845 9000 602
info@omniinstruments.co.uk
www.omniinstruments.co.uk

Australia / Asia Pacific Office
Tel +61 (0)282 442 363
Fax +61 (0)294 751 278
info@omniinstruments.com.au
www.omniinstruments.com.au

USA / Canada Office
Tel +1-866-849-3441
Fax +1-866-628-8055
info@omniinstruments.net
www.omniinstruments.net