Load Cell Mounting Accessories

LOAD BUTTONS

- **Stainless Steel Construction**
- **Eliminates Extraneous Forces**

ROD END BEARINGS

- **Durable Construction**
- **Ensures axial application of tensile force**

BALL-IN-CUP MOUNT

- **Rugged Construction**
- **Self Aligning to reduce Side Loads**
- **Flexible/Simple adaptor for Hopper Weighing Applications**

PLATFORM MOUNT

- **Stainless Steel Construction**
- **Self-Aligning for uneven floor mounting**
- **Easy installation within platform assembly**
- **Low Profile, maintaining low platform height**

LOAD BUTTONS & ROD END BEARINGS

Our range of Load Buttons and Rod End Bearings are suitable for use with the DSCK, DSCC, DBCR, DBB, DBBSM, OSB & OBBS series of Load Cells. They are designed to align forces through the principle axis of the load cell thus reducing the effects of extraneous forces, hence offering improved performance from the cell. Load buttons are used where compressive forces are applied, while rod end bearings are used in the case of tensile force being applied.

BALL-IN-CUP MOUNT

The Ball-In-Cup mount is a useful addition to the OBBS series Load Cell. It provides a flexible joint to permit limited movement of a silo or hopper due to external factors, such as temperature variations causing thermal expansion. The arrangement is very straightforward to install, thus offering a cost effective solution, minising commissioning down-time.

PLATFORM MOUNT

The Platform Mount has been specifically designed, for use with the OSB series Load Cell, in platforms, where a number of Load Cells are used together. The stainless steel construction with the inert neoprene rubber foot makes the assembly impervious to most industrial chemicals and ideal for harsh environments. They are supplied fitted to the required load cell direct from the factory.

For pricing or any further information, please contact Omni Instruments Ltd.

Measurement and data acquisition solutions

UK / Europe Office
Tel +44 (0)845 9000 601
Fax +44 (0)845 9000 602
info@omni.uk.com
www.omniinstruments.co.uk

Australia / Asia Pacific Office
Tel +61 (0)282 442 363
Fax +61 (0)294 751 278
info@omniinstruments.com.au
www.omniinstruments.com.au

USA / Canada Office
Tel +1-866-849-3441
Fax +1-866-628-8055
info@omniinstruments.net
www.omniinstruments.net

SPECIFICATION

LOAD BUTTONS FOR COMPRESSION USE

All dimensions in mm

THREAD T	M8 x 1.25	M12 x 1.75	M16 x 2	M20 x 2.5	M24 x 2
D	15	22	32	33	26
H	5	6	10	14	14
L	10	12	16	26	26
R	150	150	180	200	200

THREAD T	M30 x 2	M36 x 2	M39 x 2	M45 x 3	M50 x 2	M64 x 4
D	50	60	50	70	75	118
H	20	25	20	40	40	50
L	40	40	55	60	60	65
R	200	200	200	300	300	400

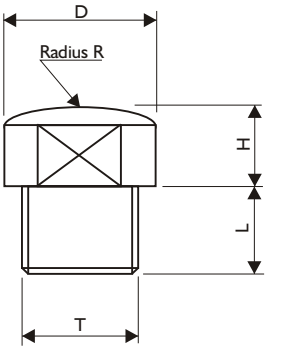

ROD END BEARINGS FOR TENSION USE

Please See Page 3 Onwards For Full Rod End Bearing Details

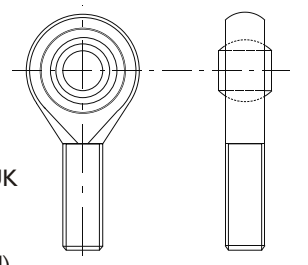

Suitable rod-end bearings are highlighted in yellow.
Load Cell types, capacities covered and corresponding rod-end model numbers are as follows:
DBBE & DBBW-500kg: GAR12-UK / DBBW-1000kg & 2000kg: GAR16-UK / DBBW-5000kg: GAR25-UK
DDE (up to 20kN): GIR12-UK / DDE-50kN: GIR16-UK / DDEN (up to 20kN): GIRSW-12RR-316
DDEN-50kN: GIRSW-16RR-316 / DBCR: GAR6-UK / DBBSMM: GAR6-UK / DBBSM (up to 250kg): GAR8-UK
DBBSM (up to 1000kg): GAR12-UK / DBBSM (up to 5000kg): GAR16-UK / DBBSM-10,000kg: GAR30-UK
DBBSM (up to 30,000kg): GAR50-UK-2S / DSCRC: GAXSW-10x1-MS / DSCC (up to 50kN): MMC 20K
DSCC (up to 250kN): GARSW35 (230kN max load) / DSCC (up to 1000kN): GAR80-UK-2RS (689kN max load)

BALL-IN-CUP MOUNT FOR OBBS SERIES LOAD CELLS

All dimensions in mm

MODEL	OBBS
RANGE	5-500kg
A	M10 x 1.5
B	M8 x 1.25
C	33
D	25
E	40
F	41
G	19.0

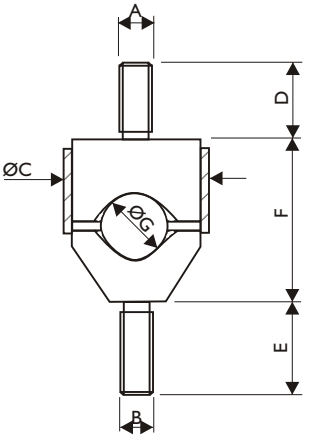

PLATFORM MOUNT FOR OSB SERIES LOAD CELLS

All dimensions in mm

MODEL	OSBKT	OSBKT	OSBST	OSBKT & OSBKT
RANGE	500-1000kg	2000kg	500-2000kg	5000kg
A	157.4	157.4	157.4	202.4
B	52	58	54	77.5
C	22	22	22	29.5
D	43	43	43	57
E	80	80	80	100

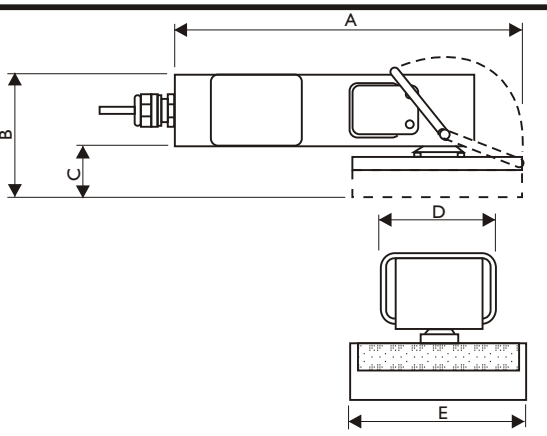

For pricing or any further information, please contact Omni Instruments Ltd.

omni INSTRUMENTS
Measurement and data acquisition solutions

UK / Europe Office
Tel +44 (0)845 9000 601
Fax +44 (0)845 9000 602
info@omni.uk.com
www.omniinstruments.co.uk

Australia / Asia Pacific Office
Tel +61 (0)282 442 363
Fax +61 (0)294 751 278
info@omniinstruments.com.au
www.omniinstruments.com.au

USA / Canada Office
Tel +1-866-849-3441
Fax +1-866-628-8055
info@omniinstruments.net
www.omniinstruments.net